THIS KIT REQUIRES A QUALITY GROUP 24 DEEP CYCLE BATTERY (CUSTOMER SUPPLIED)

INSTALLATION INSTRUCTIONS: ⚠ READ COMPETELY BEFORE STARTING!

1) SECURELY FASTEN WINCH TO WELDMENT #2 USING HARDWARE AS SHOWN.
2) DRILL 1" HOLE IN BACK OF STORAGE BOX. CENTER HOLE ACROSS BACK AND BELOW OFFSET LEDGE. INSTALL GROMMET #12.
3) INSTALL BATTERY TRAY #3 USING 4 SELF-DRILLING SCREWS #11. NOTE: BE SURE TO MOUNT TRAY TO DRIVERS SIDE OF BOX AND WITH ENOUGH ROOM TO ALLOW BATTERY TO BE INSTALLED.
4) MOUNT WINCH/WELDMENT #2 TO THE CENTER QUICKSLIDE CHANNEL USING 2 KEEPERS #4 AND HARDWARE AS SHOWN.
5) SLIP CONVOLUTED TUBE #15 OVER WINCH CABLES AND ATTACH TO BOTTOM OF LOWER RAMP CROSS-TUBE USING 12" WIRE TIE #13.
6) ROUTE WIRES BETWEEN TRAILER FRONT CROSSMEMBER AND REARMOST TONGUE CROSSMEMBER. ATTACH WIRES/TUBE TO TONGUE CROSSMEMBER USING 28" WIRE TIE #14.
7) SLIP WINCH CABLE ENDS THRU GROMMET #12 AND INTO STORAGE BOX. SLIP RED TERMINAL COVER #20 OVER RED CABLE AND ATTACH CABLE TO POSITIVE BATTERY TERMINAL. SLIP BLACK TERMINAL COVER #19 OVER BLACK CABLE AND ATTACH CABLE TO NEGATIVE BATTERY TERMINAL. NOTE: CABLE END ON RED CABLE MAY NEED TO BE DRILLED OPEN TO SLIP OVER BATTERY POST. POSITION TERMINAL COVERS OVER BATTERY POSTS.

IT IS RECOMMENDED TO INSTALL A QUALITY BATTERY TENDER/CHARGER TO INSURE PROPER BATTERY PERFORMANCE WHEN NEEDED.

TRITON Customer Instruction Sheet

KIT NO.	DESCRIPTION	REV	DATE	DRAWING NO.
13570	CAR HAULER WINCH	1	12-19-08	13574
			DRAWN BY L Wagner	

Parts List
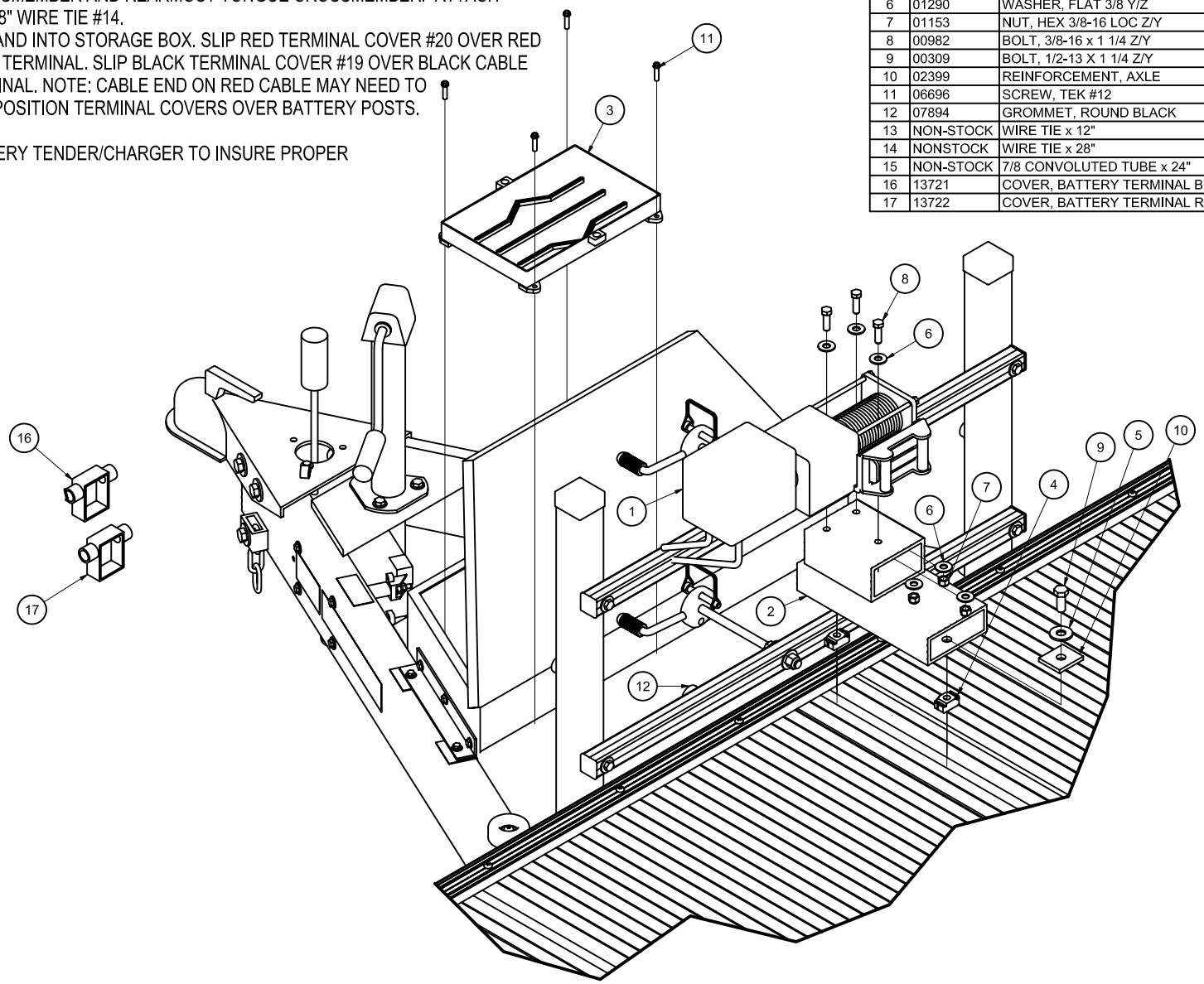
ITEM	PART NUMBER	DESCRIPTION	QTY
1	08990	WINCH, EB	1
2	13573	WELDMENT, WINCH MOUNT	1
3	13569	BATTERY TRAY, GROUP 24	1
4	07728	KEEPER, TIE DOWN ZINC	2
5	02410	WASHER, FLAT 1/2 Y/Z	2
6	01290	WASHER, FLAT 3/8 Y/Z	6
7	01153	NUT, HEX 3/8-16 LOC Z/Y	3
8	00982	BOLT, 3/8-16 x 1 1/4 Z/Y	3
9	00309	BOLT, 1/2-13 X 1 1/4 Z/Y	2
10	02399	REINFORCEMENT, AXLE	2
11	06696	SCREW, TEK #12	4
12	07894	GROMMET, ROUND BLACK	1
13	NON-STOCK	WIRE TIE x 12"	1
14	NONSTOCK	WIRE TIE x 28"	1
15	NON-STOCK	7/8 CONVOLUTED TUBE x 24"	1
16	13721	COVER, BATTERY TERMINAL BLACK	1
17	13722	COVER, BATTERY TERMINAL RED	1