Parts List		
ITEM	PART NU	DESCRIPTION
1	00308	BOLT, 1/2-13 X 2 3/4 Z/Y
2	00982	BOLT, 3/8-16 x 1 1/4 Z/Y
3	01098	NUT, HEX 1/2-13 LOC Z/Y
4	01153	NUT, HEX 3/8-16 LOC Z/Y
5	01290	WASHER, FLAT 3/8 Y/Z
6	02406	LUGNUT, 1/2-20
7	02616	ROLLER, REAR GUIDE
8	03530	BRACKET, LICENSE PLATE (PLASTIC)
9	04267	VINYL CAP, 2 x 3 x 1 1/2 SILVER
10	05307	PULLEY
11	06690	JACK, 2000# WELD ON
12	06851	COLLAR, 5/8 SHAFT w/SET SCREW
13	07903	WIRE HARNESS, E-PONTOON
14	07934	LIGHT, AMBER CLEARANCE TOON
15	07935	TAIL LIGHT, RH W/PLUG-ETOON
16	07947	TAIL LIGHT, LH W/PLUG-ETOON
17	08287	PLUG, 2 SQ BLACK
18.1	01146	WINCH, 1500#
18.2	02031	CABLE, 1/4 X 17'
18.3	02397	PIN, BED LOCKING
19.1	00309	BOLT, 1/2-13 X 1 1/4 Z/Y
19.2	01097	BOLT, 1/2-13 X 4 Z/Y
19.3	01098	NUT, HEX 1/2-13 LOC Z/Y
19.4	01099	BOLT, 1/2-13 X 3 1/2 Z/Y
19.5	02410	WASHER, FLAT 1/2 Y/Z
19.6	02478	COUPLER, CLASS II
19.7	03605	BOLT, CARRIAGE 1/2-13 X 3 Z/Y
19.8	03707	TUBE, SWING ARM
19.9	03957	TUBE, 2 X 3 X .125 X 194 REDKOTE
19.10	04153	TIRE & WHEEL, 5.30 X 12 C SILVER
19.11	06264	AXLE IDLER, #10 PONTOON
20	09362	DECAL, TRITON MEDIUM
21	09663	CHAIN, SAFETY CLASS II

To obtain a copy of your Owner's Manual & Safety Instructions contact Triton at www.tritiontrailers.com

FAILURE TO FOLLOW MAINTENANCE INSTRUCTIONS WILL VOID WARRANTY!

TRITON Customer Instruction Sheet

KIT NO.			
DESCRIPTION: 2008 E PONTOON	REV 0	DATE: 4-8-08	DRAWING NO. 07958
		DRAWN BY: Terri Feutz	

HELPFUL HINTS FOR AXLE PLACEMENT

One of the best features of the Triton pontoon trailers is the multiposition axle mounts. Though factory installed axle positions work in most applications, you may need to "fine tune" the axle placement.

The result that needs to be obtained is 7-10 percent tongue weight. That is, 7-10 percent of the gross weight. For example, if your boat/trailer package weights 2000 lbs., you should have 140 lbs. to 200 lbs. of tongue weight. Typically, when the boat is properly loaded, the center of the tire on a single axle trailer will line up with the steering console on the boat, or the center between the two tires on a tandem axle trailer. Axles can easily be moved by jacking the rear of the trailer, removing the 1/2" bolts, and sliding the axle/tire assembly forward or backward to the desired set of slots. Make sure that all hardware is tight.

REMINDER: Inadequate tongue weight will cause sway by the trailer. Excessive tongue weight can cause similar results and/or damage to suspension of tow vehicle.

Proper hitch height also plays an important role in sucessful towing.

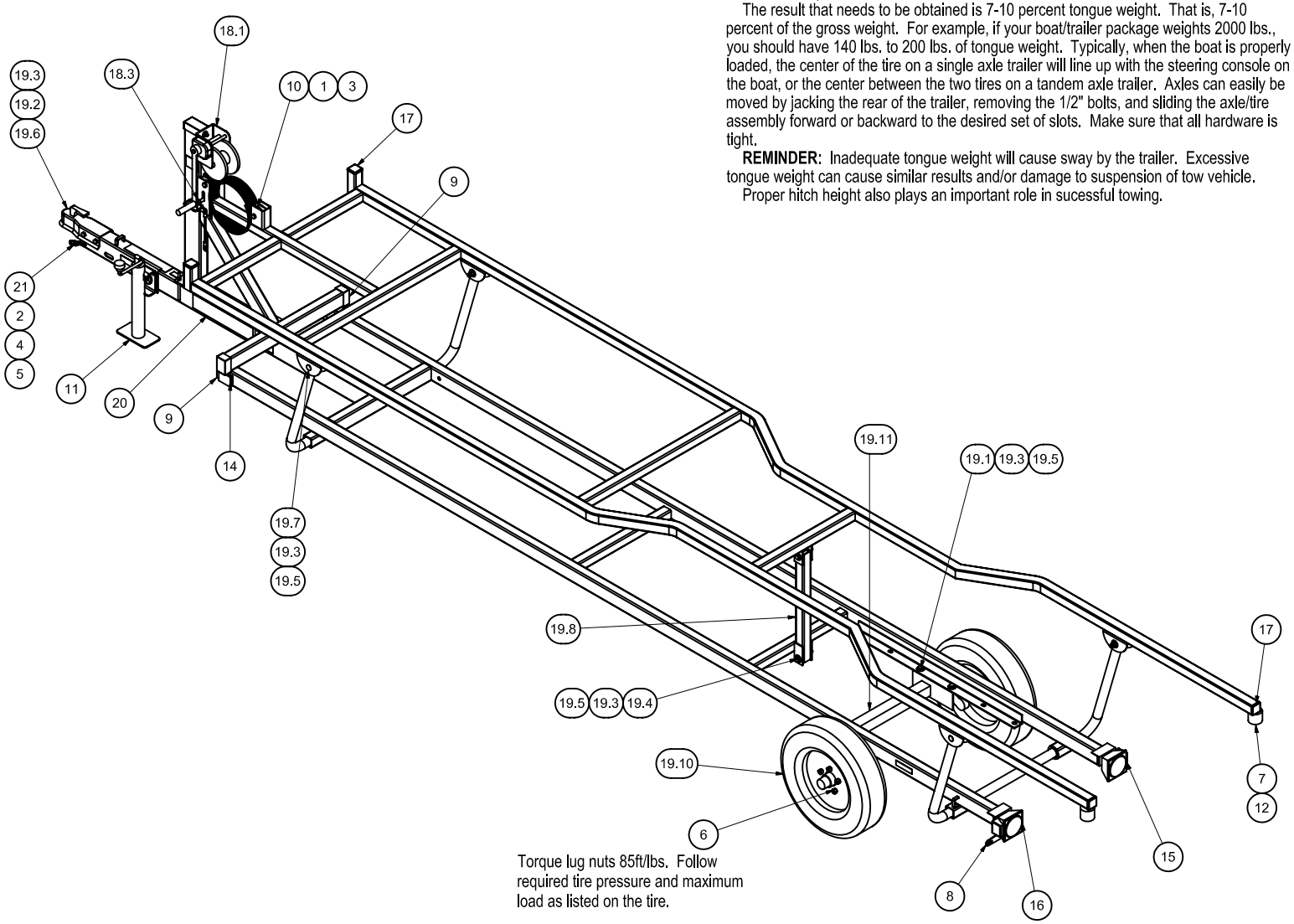

Torque lug nuts 85ft/lbs. Follow required tire pressure and maximum load as listed on the tire.